A-COIL for UNITARY SIDE DISCHARGE SPLIT SYSTEM 24VAC CONTROL

60,000 BTU / H UNITARY HEAT PUMP SPLIT SYSTEM

SUBMITTAL DATA: TCAT60H/NaA TU60-48WADU

Job Name	Location		Date	
Purchaser	Engineer			
Submitted To	For	Reference	Approval	Construction
Unit Designation	Schedule No.			

SYSTEM TYPE: HEAT PUMP

TU60-48WADU

TCAT60H/NaA

GENERAL FEATURES

- High Efficiency DC Inverter Technology
- Compact and Quiet 55 dB(A) Outdoor Unit
- Zero Lot Line Design
- Compatible with TOSOT or Competitive Indoor Unit
- Designed for New Construction or Retrofit Market
- 24VAC Thermostat Compatible
- Low Ambient Cooling down to 5°F/-15°C
- Low Ambient Heating down to -22°F/-30°C
- Outdoor Coil has Copper Tube/Aluminum Fin with Acetal-Resin Coating (Golden Fin - 1500Hr Salt Spray)
- Indoor Coil has Copper Tube/Aluminum Fin with Acetal-Resin Coating (Blue Fin - 500Hr Salt Spray)
- Limited Warranty: 10 Year Parts, 10 Years Compressor
- Residential & Commercial

SYSTEM PERFORMANCE			
Cooling	Rated Capacity @ 95°F	Btu/h	50,500
	Min-Max Capacity	Btu/h	35,000 ~ 54,000
Heating	Rated Capacity @ 47°F	Btu/h	53,000
	Rated Capacity @ 17°F	Btu/h	35,200
	Rated Capacity @ 5°F	Btu/h	37,200
	Min-Max Capacity	Btu/h	35,000 ~ 60,000
SEER2 / EER2			15.2 / 9.5
HSPF2			8.5
COP @47°F			3.5
COP @ 5°F			1.8
AHRI Number			212361368
Cooling Temperature Range		°F / °C	5 ~ 129 / -15~54
Heating Temperature Range		°F / °C	-22 ~ 75 / -30~24
INDOOR UNIT			**TCAT60H/NaA**
Dehumidification		pt/hr	12.13
Condensate Drain Hose Size(OD)		in	3/4
Unit Dimension (WxHxD)		in	24-1/2 x 28-1/2 x 21-1/4
Refrigerant Pre-charged (R410A)		oz	8.8
Weight (Net / Gross)		lbs	95/110
OUTDOOR UNIT			**TU60-48WADU**
Compressor Type			Inverter Rotary
Compressor RLA		A	19
Fan Motor Output Power		W	149 x 2
Fan Motor		A	1.5 x 2
Sound Pressure Level		dB(A)	55 (48~61)
Unit Dimension (WxHxD)		In	39-3/8 x 53-5/8 x 14-1/2
Weight (Net / Gross)		lbs	308 / 337
Refrigerant Pre-charged (R410A)		oz	220.5
Coil Type (Golden Fin)			Copper Tube / Aluminum Fin
REFRIGERANT PIPING			
Line Set Size (Liquid - Gas)		in	3/8 - 3/4
Pre-charged Piping Length		ft	31
Additional Charge		oz/ft	0.32
Toal Pipe Length (Min - Max)		ft	10 – 98
Max. Pipe Elevation		ft	49
ELECTRICAL			
Power Supply			208/230V / 1Ph / 60 Hz
Outdoor Unit	Rated Current (Cooling / Heating)	A	30 / 31
	MCA / MOCP	A	35 / 45
Main Power Wire Size		AWG	Size Per Local Code
LIMITED WARRANTY	10 Year Parts, 10 Years Compressor - Residential & Commercial		

Americo HVAC Supply LLC

Tel: +1 877-298-7191
Email: info@tosotclima.com
Website: tosotclima.com
1266 San Luis Obispo Ave. Hayward, CA. 94544

EXTENDED RATINGS: TCAT60H/NaA TU60-48WADU

COOLING PERFORMANCE

Outdoor Ambient Temperature (DB)		Return Air Temperature																			
		70°F (DB) / 59°F (WB)					75°F (DB) / 63°F (WB)					80°F (DB) / 67°F (WB)					90°F (DB) / 73°F (WB)				
		TC (Btu/h)	SC (Btu/h	SHR	EER	Power Input (W)	TC (Btu/h)	SC (Btu/h	SHR	EER (Btu/ (h·W))	Power Input (W)	TC (Btu/h)	SC (Btu/h	SHR	EER (Btu/ (h·W))	Power Input (W)	TC (Btu/h)	SC (Btu/h	SHR	EER (Btu/ (h·W))	Power Input (W)
MAX OUTPUT*	5°F	45900	32130		14.76	3110	49950	34565		16.59	3010	54000	37000			2910	56000	38400		18.79	2980
	10°F	45900	32130		14.12	3250	49950	34565		15.86	3150	54000	37000			3050	56000	38400		17.95	3120
	15°F	45900	32130		13.58	3380	49950	34565		15.28	3270	54000	37000			3160	56000	38400		17.34	3230
	20°F	45900	32130		13.11	3500	49950	34565		14.58	3425	54000	37000			3350	56000	38400		16.37	3420
	25°F	45900	32130		12.75	3600	49950	34565		14.03	3560	54000	37000			3520	56000	38400		15.60	3590
	30°F	45900	32130		12.54	3660	49950	34565		13.70	3645	54000	37000			3630	56000	38400		15.14	3700
	35°F	45900	32130		12.31	3730	49950	34565		13.37	3735	54000	37000			3740	56000	38400		14.70	3810
	40°F	45900	32130		12.11	3790	49950	34565		13.04	3830	54000	37000			3870	56000	38400		14.21	3940
	45°F	45900	32130		11.92	3850	49950	34565		12.74	3920	54000	37000			3990	56000	38400		13.79	4060
	50°F	45900	32130		11.77	3900	49950	34560		12.46	4010	54000	36990			4120	56000	38390		13.37	4190
	55°F	45900	32130		11.65	3940	49950	34715		12.33	4050	54000	37300			4160	56000	38700		13.24	4230
	60°F	45900	32130		11.53	3980	49950	34815		12.21	4090	54000	37500			4200	56000	38900		13.11	4270
	65°F	45900	32130		11.39	4030	49950	34965		12.07	4140	54000	37800			4250	56000	39200		12.96	4320
	70°F	45900	32080		11.17	4110	49950	34915		11.84	4220	54000	37750			4330	56000	39150		12.73	4400
	75°F	45900	32038		10.98	4180	49950	34865		11.64	4290	54000	37692			4400	56000	39092		12.53	4470
	80°F	45900	31950		10.80	4250	50200	34950		11.45	4385	54500	37950			4520	56500	39350		12.31	4590
	85°F	45900	31901		10.63	4320	50450	35063		11.25	4485	55000	38225			4650	57000	39625		12.08	4720
	90°F	45900	23015		10.09	4550	50450	30683		10.53	4790	55000	38350			5030	57000	39750		11.18	5100
	95°F	45900	32130		9.58	4790	50450	35315		9.89	5100	55000	38500			5410	57000	39900		10.40	5480
	°	45900	31880		8.42	5450	50200	34890		8.69	5775	54500	37900		8.93	6100	56500	39300		9.16	6170
	°	45900	31671		7.40	6200	49950	34466		7.77	6425	54000	37260		8.12	6650	56000	38660		8.33	6720
	°	45900	28900		8.20	5600	47950	32080		8.20	5850	50000	35260		8.20	6100	52000	36660		8.43	6170
	°	36000	25560		7.20	5000	41000	29110		7.66	5350	46000	32660		8.07	5700	48000	34060		8.32	5770
	°	35000	25000		7.29	4800	38500	28050		7.48	5150	42000	31100		7.64	5500	44000	32500		7.90	5570
	°	34000	24500		7.39	4600	37750	27600		7.55	5000	41500	30700		7.69	5400	43500	32100		7.95	5470
	°	32000	23300		7.44	4300	36400	26800		7.58	4800	40800	30300		7.70	5300	42800	31700		7.97	5370
	°	30000	22700		7.50	4000	29500	26800		7.02	4200	29000	30900		6.59	4400	31000	32300		6.94	4470

*Maximum Output values are not based on AHRI test conditions

LEGEND	W - Watts
	DB - Dry Bulb
	TC - Total Capacity
	SC - Sensible Capacity
	SHR - Sensible Heat Ratio
	COP - Coeffecient of Performance

Americo HVAC Supply LLC

Tel: +1 877-298-7191
Email: info@tosotclima.com
Website: tosotclima.com

1266 San Luis Obispo Ave.
Hayward, CA. 94544

EXTENDED RATINGS: TCAT60H/NaA TU60-48WADU

HEATING PERFORMANCE

Outdoor Ambient Temperature (DB)		Return Air Temperature											
		70°F (DB) / 59°F (WB)			75°F (DB) / 63°F (WB)			80°F (DB) / 67°F (WB)			90°F (DB) / 73°F (WB)		
		TC (Btu/h)	COP (W/W)	Power Input (W)	TC (Btu/h)	COP (W/W)	Power Input (W)	TC (Btu/h)	COP (W/W)	Power Input (W)	TC (Btu/h)	COP (W/W)	Power Input (W)
MAX OUTPUT*	22°	27000	1.25	6350	26500	1.22	6380	26000	1.19	6410	27500	1.24	6490
	20°	29000	1.31	6500	29000	1.30	6525	28500	1.29	6480	30000	1.34	6560
	15°	32000	1.40	6700	31500	1.39	6630	31000	1.38	6560	32500	1.43	6640
	10°	34000	1.45	6900	33750	1.47	6750	33000	1.45	6690	34500	1.49	6770
	-5°F	37000	1.55	7000	36000	1.53	6910	35000	1.50	6820	36500	1.55	6900
	0°F	40500	1.68	7080	39500	1.64	7040	38500	1.61	7000	40000	1.66	7080
	5°F	44000	1.80	7160	43000	1.76	7165	42000	1.72	7170	43500	1.76	7250
	10°F	45500	1.87	7140	44250	1.83	7105	43000	1.78	7070	44500	1.82	7150
	15°F	47250	1.94	7120	45625	1.90	7045	44000	1.85	6970	45500	1.89	7050
	17°F	49000	2.02	7100	47000	1.97	6985	45000	1.92	6870	46500	1.96	6950
	20°F	51000	2.17	6900	49000	2.10	6825	47000	2.04	6750	48500	2.08	6830
	25°F	53000	2.32	6700	51250	2.24	6700	49500	2.17	6700	51000	2.20	6780
	30°F	54000	2.43	6500	53000	2.36	6580	52000	2.29	6660	53500	2.33	6740
	35°F	54000	2.33	6800	53000	2.32	6700	52000	2.31	6600	53500	2.35	6680
	40°F	54800	2.55	6300	53400	2.54	6150	52000	2.54	6000	53500	2.58	6080
	45°F	55500	2.80	5800	53750	2.79	5650	52000	2.77	5500	53500	2.81	5580
	47°F	56000	3.10	5300	54000	3.06	5175	52000	3.02	5050	53500	3.06	5130
	50°F	57000	3.04	5500	54500	3.10	5150	52000	3.18	4800	53500	3.21	4880
	55°F	58500	3.09	5550	55250	3.19	5075	52000	3.31	4600	53500	3.35	4680
	60°F	60000	3.26	5400	55000	3.29	4900	50000	3.33	4400	51500	3.37	4480
	65°F	60000	3.32	5300	55000	3.47	4650	50000	3.66	4000	51500	3.70	4080
	70°F	60000	3.38	5200	55000	3.66	4400	50000	4.07	3600	51500	4.10	3680
	75°F	60000	3.45	5100	55000	3.88	4150	50000	4.58	3200	51500	4.60	3280
	80°F												
	86°F												

*Maximum Output values are not based on AHRI test conditions

LEGEND	W - Watts
	DB - Dry Bulb
	TC - Total Capacity
	SC - Sensible Capacity
	SHR - Sensible Heat Ratio
	COP - Coeffecient of Performance

Americo HVAC Supply LLC

Tel: +1 877-298-7191
Email: info@tosotclima.com
Website: tosotclima.com

1266 San Luis Obispo Ave.
Hayward, CA. 94544

TOSOT

FEATURES SUMMARY: TCAT60H/NaA TU60-48WADU

SYSTEM FEATURES	
Compressor	Inverter
Ultra Low Frequency Torque Control	YES
Power Factor Correction	YES
Compressor Type	Rotary + Enhance Vapor Injection
Refrigerant Type	R410A
Outdooor Electronic Expansion Valve (EEV)	YES
Indoor TXV Control Required	YES
Basepan With Electric Heater	YES
Compressor With Electric Heater	YES
Fin Coating (Outdoor - Golden & Indoor - Blue)	Acrylic Resin
Intelligent Defrosting	YES
Intelligent Preheating	YES
Low Voltage Startup	YES
Memory/Power Failure Recovery	YES
Self Diagnosis	YES
Low Ambient Cooling	YES
24VAC Thermostat Compatible	YES
Support Backup Heating	YES

EXTERNAL STATIC PRESSURE

UNIT: inwc	STANDARD CFM											
	600	700	800	900	1000	1100	1200	1300	1400	1500	1600	1700
TCAT48H/NaA				0.165	0.194	0.226	0.260	0.298	0.338	0.380	0.422	0.468
TCAT60H/NaA				0.171	0.195	0.234	0.267	0.307	0.344	0.389	0.427	0.478

Americo HVAC Supply LLC
TOSOT GREE

Tel: +1 877-298-7191
Email: info@tosotclima.com
Website: tosotclima.com

1266 San Luis Obispo Ave.
Hayward, CA. 94544

STRUCTURE & INSTALLATION INFORMATION: TCAT60H/NaA

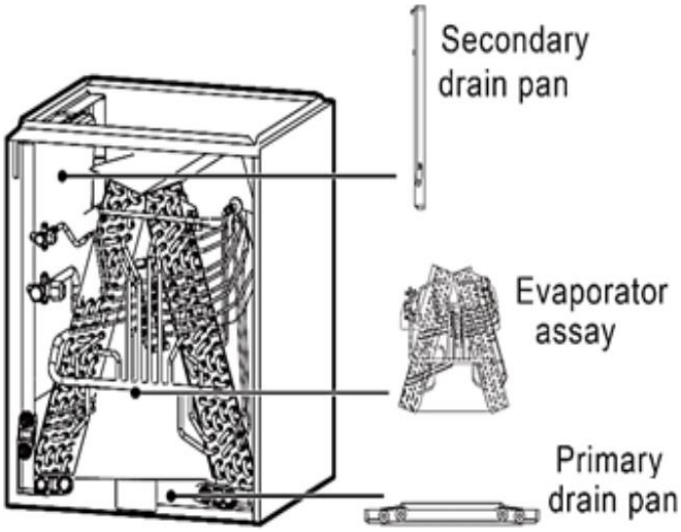

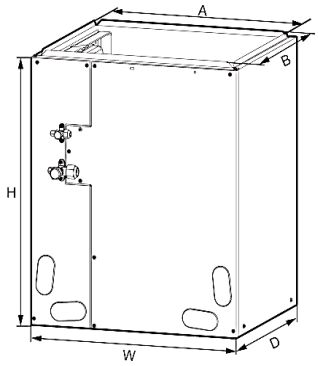

Unit: inch(mm)

Model	Dimension				
	W	D	H	A	B
TCAT24F/NaA	17-1/2(445)	21-1/4(540)	23(584)	15-7/8(403)	19-3/8(492)
TCAT36F/NaA	17-1/2(445)	21-1/4(540)	23(584)	15-7/8(403)	19-3/8(492)
TCAT48H/NaA	24-1/2(622)	21-1/4(540)	28-1/2(724)	22-7/8(581)	19-3/8(492)
TCAT60H/NaA	24-1/2(622)	21-1/4(540)	28-1/2(724)	22-7/8(581)	19-3/8(492)

❑ Horizontal Installation

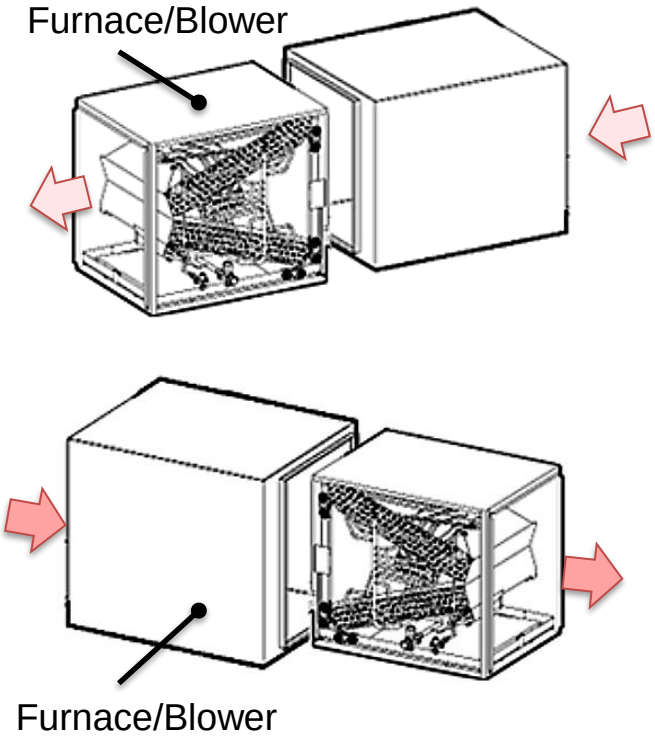

❑ Vertical Installation

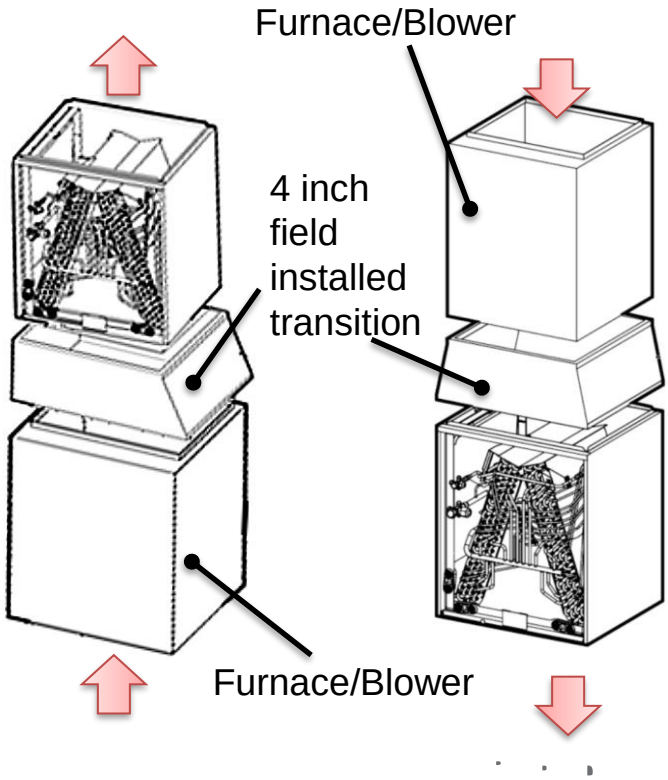

Americo HVAC Supply LLC
TOSOT GREE

Tel: +1 877-298-7191
Email: info@tosotclima.com
Website: tosotclima.com

1266 San Luis Obispo Ave.
Hayward, CA. 94544

DIMENSIONS & CLEARANCES: TU60-48WADU

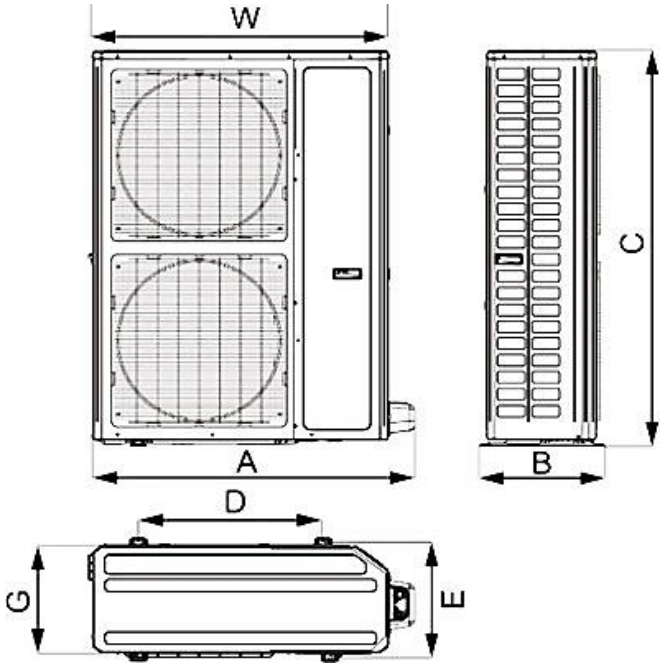

Dimensions	
A	42-3/4
B	16-7/8
C	53-5/8
D	24-3/8
E	15-5/8
G	14-1/2

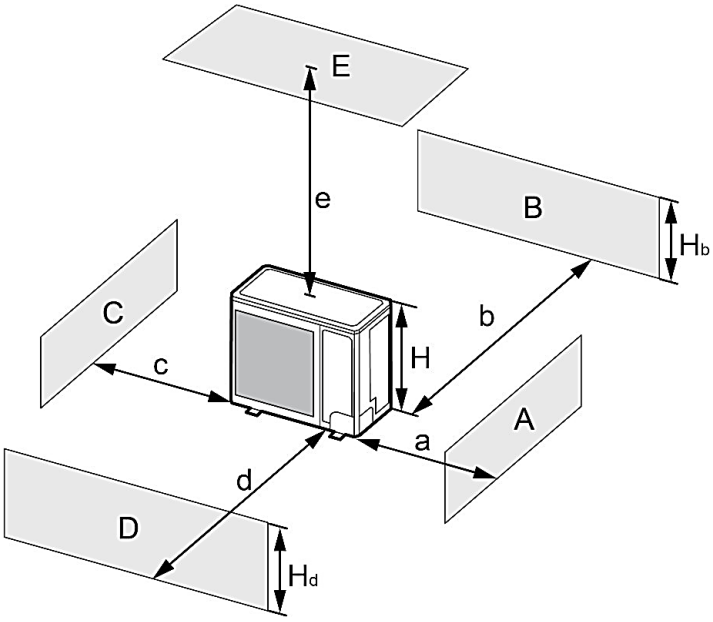

Obstacle/Wall A~E	Obstacle/Wall Hb Hd H		Clearance (in)				
			A	b	c	d	e
B	—		-	≥4	-	-	-
A,B,C,	—		≥12	≥4	≥4	-	-
B,E	—		-	≥4	-	-	≥10
A,B,C,E	—		≥12	≥6	≥6	-	≥40
A,C,E	—		≥8	-	≥20	-	≥10
D	—		-	-	-	≥40	-
D,E	—		-	-	-	≥40	≥40
B,D	Hb < Hd	Hd > H	-	≥4	-	≥40	-
	Hb > Hd	Hd < H	-	≥4	-	≥40	-
B,D,E	Hb < Hd	Hb ≤ 1/2H	-	≥10	-	≥80	≥40
		1/2H < Hb ≤ H	-	≥10	-	≥80	≥40
		Hb > H	Prohibited				
	Hb > Hd	Hd ≤ 1/2H	-	≥4	-	≥80	≥40
		1/2H < Hd ≤ H	-	≥200	-	≥80	≥40
		Hd > H	Prohibited				

R410A INVERTER Intertek AHRI CERTIFIED

Americo HVAC Supply LLC

Tel: +1 877-298-7191
Email: info@tosotclima.com
Website: tosotclima.com

1266 San Luis Obispo Ave.
Hayward, CA. 94544